OSPF8N65

650V N-CHANNEL MOSFET

◆ Features：

- ✧ Fast switching speed
  开关速度快
- ✧ High input impedance and low level drive
  高输入阻抗和低电平驱动
- ✧ Avalanche energy tested
  雪崩能量测试
- ✧ Improved dv/dt capability，high ruggedness
  提高 dv/dt 能力，高耐用性

RoHS COMPLIANT

TO-220F

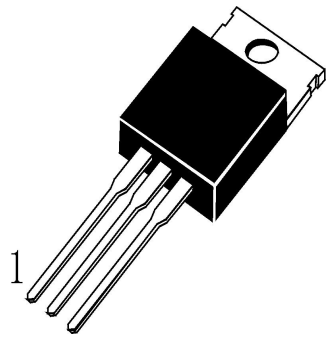

◆ Applications

- ✧ High efficiency switch mode power supplies
  高效率开关电源
- ✧ Power factor correction
  功率因数校正
- ✧ Electronic lamp ballast
  电子整流器

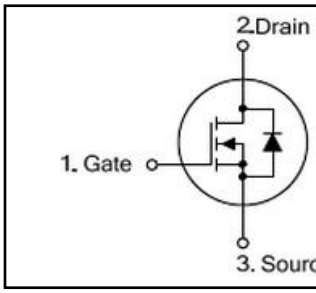

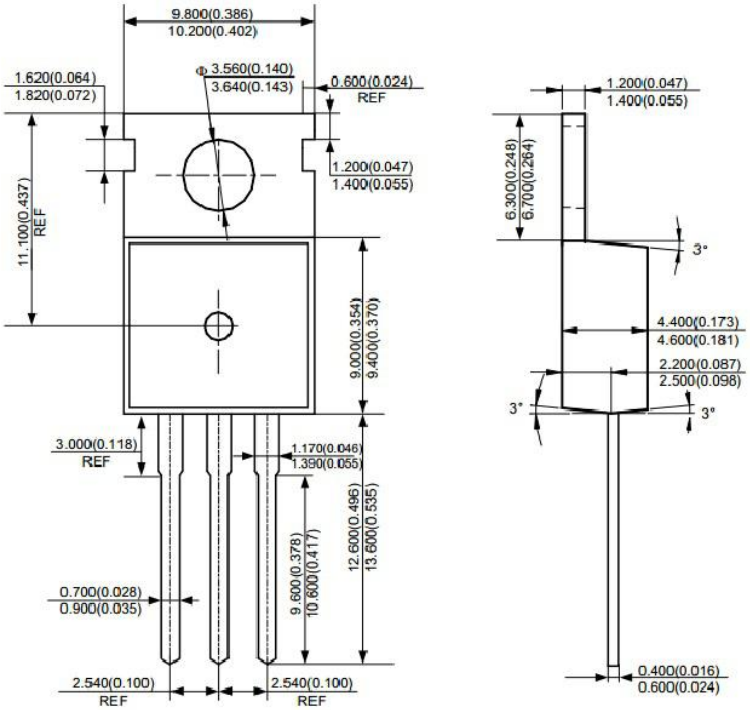

◆ Absolute Maximum Ratings (Tc=25°C)

Symbol	Parameters	Ratings	Unit
V_{DSS}	Drain-Source Voltage 漏源电压	**650**	V
V_{GS}	Gate-Source Voltage-Continuous 栅源电压	**±30**	V
I_D	Drain Current-Continuous（Note 2） 漏极持续电流	**8**	A
I_{DM}	Drain Current-Single Plused（Note 1） 漏极单次脉冲电流	**52**	A
P_D	Power Dissipation （Note 2） 功率损耗	**147**	W
T_j	Max.Operating junction temperature 最大结温	**150**	℃

◆ Electrical characteristics (Tc=25°C unless otherwise noted)

Symbol	Parameters	Min	Typ	Max	Units	Conditions
Static Characteristics						
B_{VDSS}	Drain-Source Breakdown VoltageCurrent （Note 1） 漏极击穿电压	**650**	--	--	mA	I_D=250μA， V_{GS}=0V，T_J=25°C
$V_{GS(th)}$	Gate Threshold Voltage 栅极开启电压	**2.0**	--	**4.0**	V	V_{DS}=V_{GS}，I_D=250μA
$R_{DS(on)}$	Drain-Source On-Resistance 漏源导通电阻	--	**1.0**	**1.2**	Ω	V_{GS}=10V，I_D=4A
I_{GSS}	Gate-Body Leakage Current 栅极漏电流	--	--	**±100**	nA	V_{GS}=±30V，V_{DS}=0
I_{DSS}	Zero Gate Voltage Drain Current 零栅极电压漏极电流	--	--	**1**	μA	V_{DS}=650V，V_{GS}=0

Switching Characteristics						
$T_{d(on)}$	Turn-On Delay Time 开启延迟时间	--	**16.5**	**45**	ns	V_{DS}=325V，I_D=8A，R_G=25Ω（Note 2）
T_r	Rise Time 上升时间	--	**60.5**	**130**	ns	
$T_{d(off)}$	Turn-Off Delay Time 关闭延迟时间	--	**81**	**170**	ns	
T_f	Fall Time 下降时间	--	**64.5**	**140**	ns	
Q_g	Total Gate Charge 栅极总电荷	--	**28**	**36**	nC	V_{DS}=480V，V_{GS}=10V，I_D=8A（Note 2）
Q_{gs}	Gate-Source Charge 栅源极电荷	--	**4.5**	--	nC	
Q_{gd}	Gate-Drain Charge 栅漏极电荷	--	**12**	--	nC	
Dynamic Characteristics						
C_{iss}	Input Capacitance 输入电容	--	**965**	**1255**	pF	V_{DS}=25V，V_{GS}=0，f=1MHz
C_{oss}	Output Capacitance 输出电容	--	**105**	**135**	pF	
C_{rss}	Reverse Transfer Capacitance 反向传输电容	--	**12**	**16**	pF	
I_S	Continuous Drain-Source Diode Forward Current（Note 2） 二极管导通正向持续电流	--	--	**8**	A	
V_{SD}	Diode Forward On-Voltage 二极管正向导通电压	--	--	**1.4**	V	I_S=8A，V_{GS}=0
$R_{th(j-c)}$	Thermal Resistance, Junction to Case 结到外壳的热阻	--	--	**0.85**	℃/W	

Note 1: Repetitive Rating : Pulse width limited by maximum junction temperature
Note 2: Pulse test: PW <= 300us , duty cycle <= 2%.

◆ Ratings and Characteristic curves

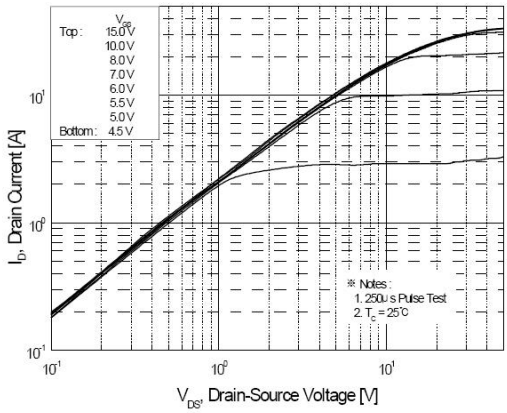

Figure 1. On-Region Characteristics

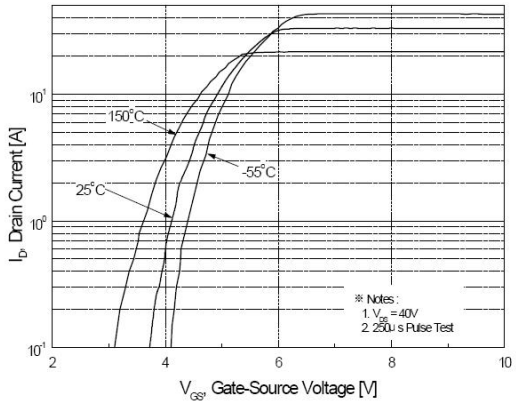

Figure 2. Transfer Characteristics

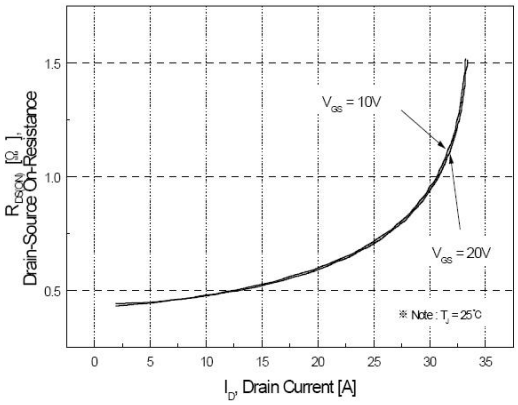

Figure 3. On-Resistance Variation vs Drain Current and Gate Voltage

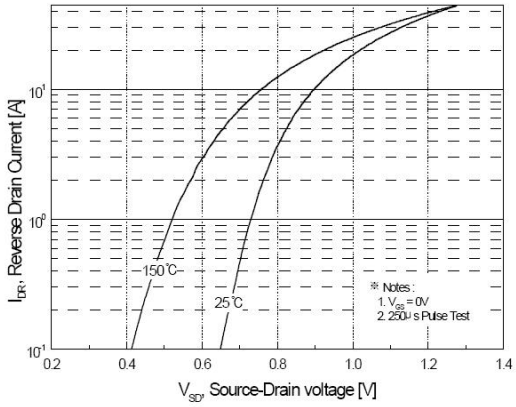

Figure 4. Body Diode Forward Voltage Variation with Source Current and Temperature

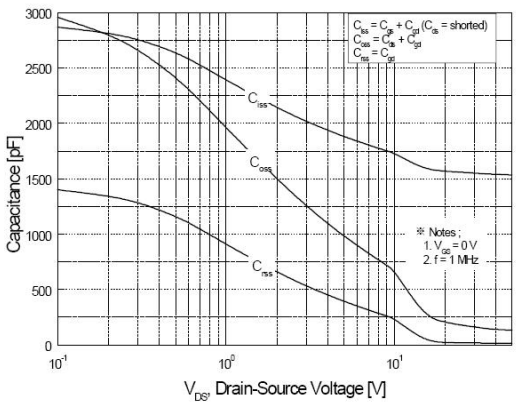

Figure 5. Capacitance Characteristics

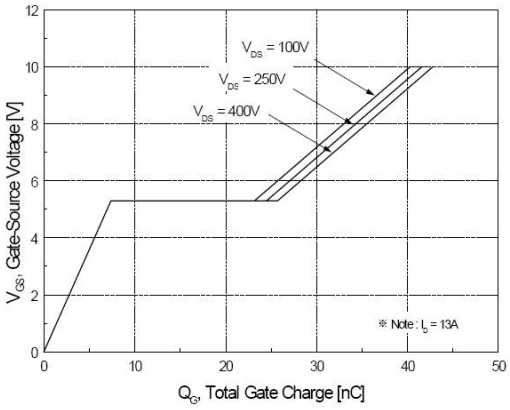

Figure 6. Gate Charge Characteristics

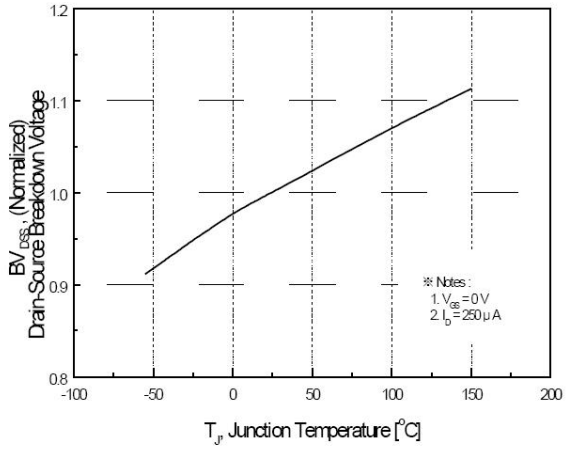

Figure 7. Breakdown Voltage Variation vs Temperature

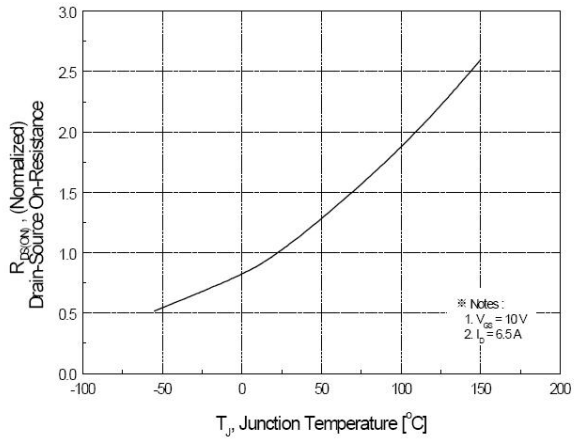

Figure 8. On-Resistance Variation vs Temperature

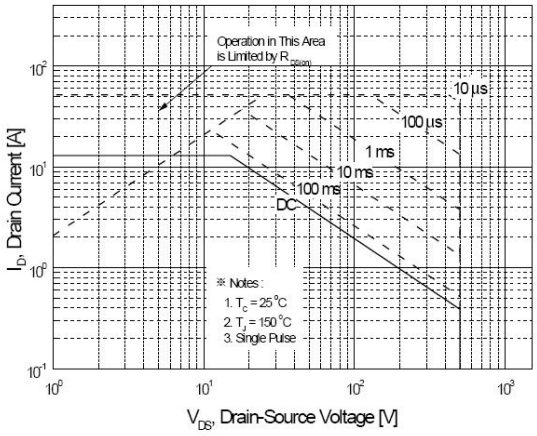

Figure 9. Maximum Safe Operating Area

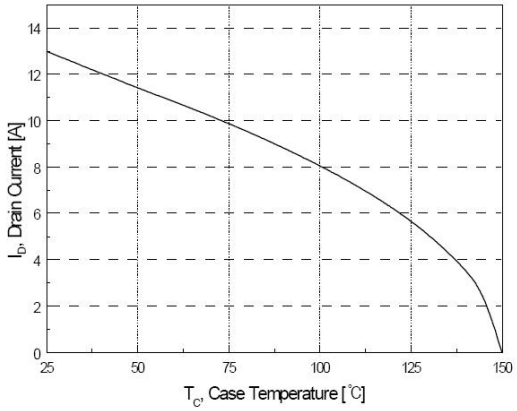

Figure 10. Maximum Drain Current vs Case Temperature

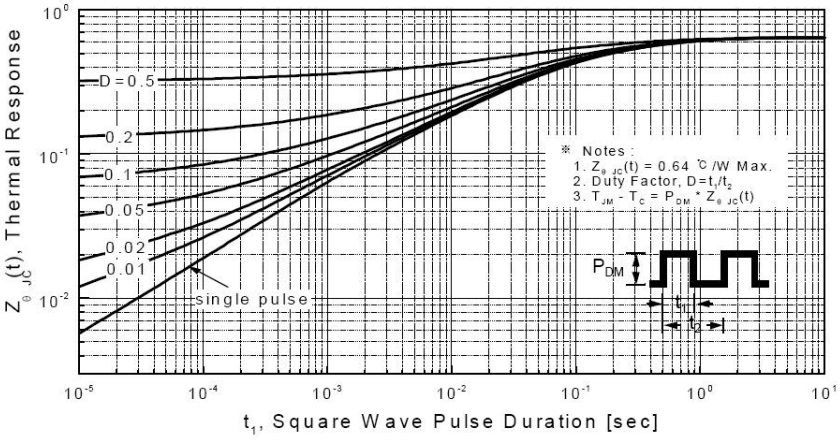

Figure 11. Transient Thermal Response Curve

Fig 12. Gate Charge Test Circuit & Waveform

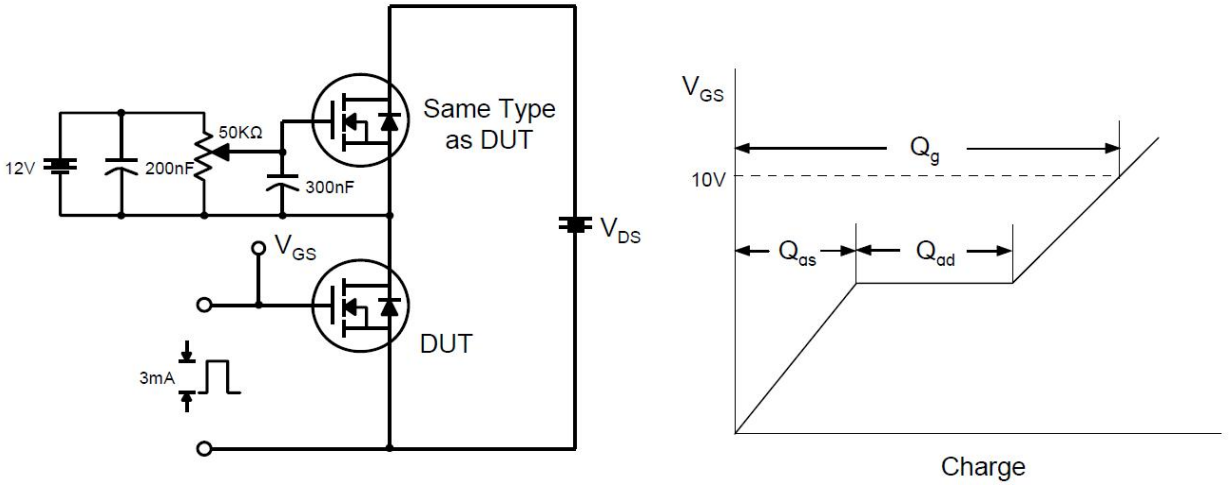

Fig 13. Resistive Switching Test Circuit & Waveforms

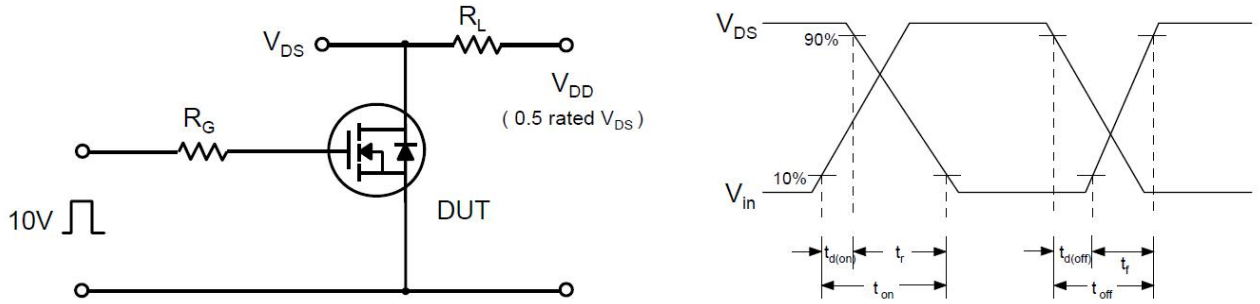

Fig 14. Unclamped Inductive Switching Test Circuit & Waveforms

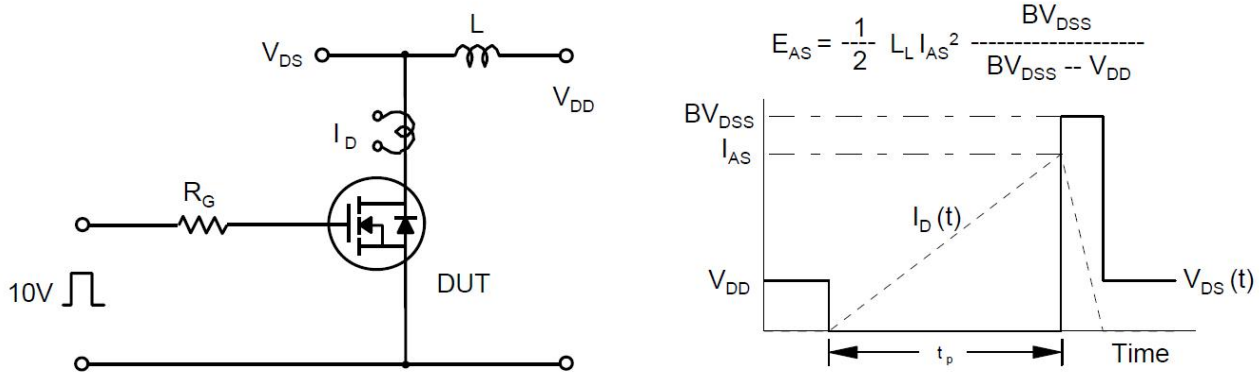
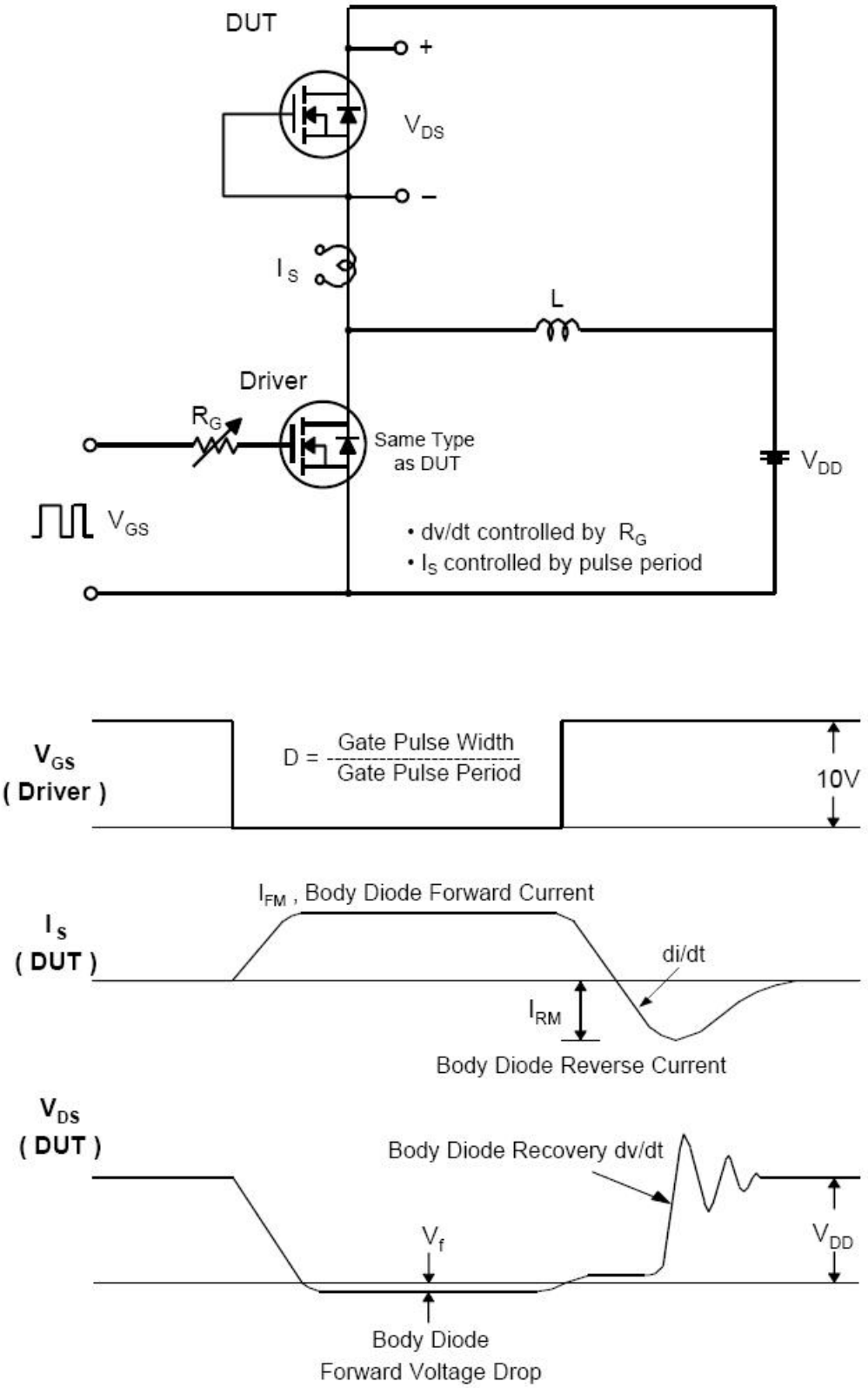
Fig 15. Peak Diode Recovery dv/dt Test Circuit & Waveforms